Airbags and Safety Belt Tensioners

From November 2004

Notes:

Information for

- Relay and fuse arrangements
- Connector arrangements
- Control Modules and Relays
- Ground connections

⇒ Component Locations!

Information for

- Troubleshooting Procedures

⇒ Guided Fault Finding using VAS 5051/5052

Protected by copyright. Copying for private or commercial purposes, in part or in whole, is not permitted unless authorised by AUDI AG. AUDI AG does not guarantee or accept any liability with respect to the correctness of information in this document. Copyright by AUDI AG.

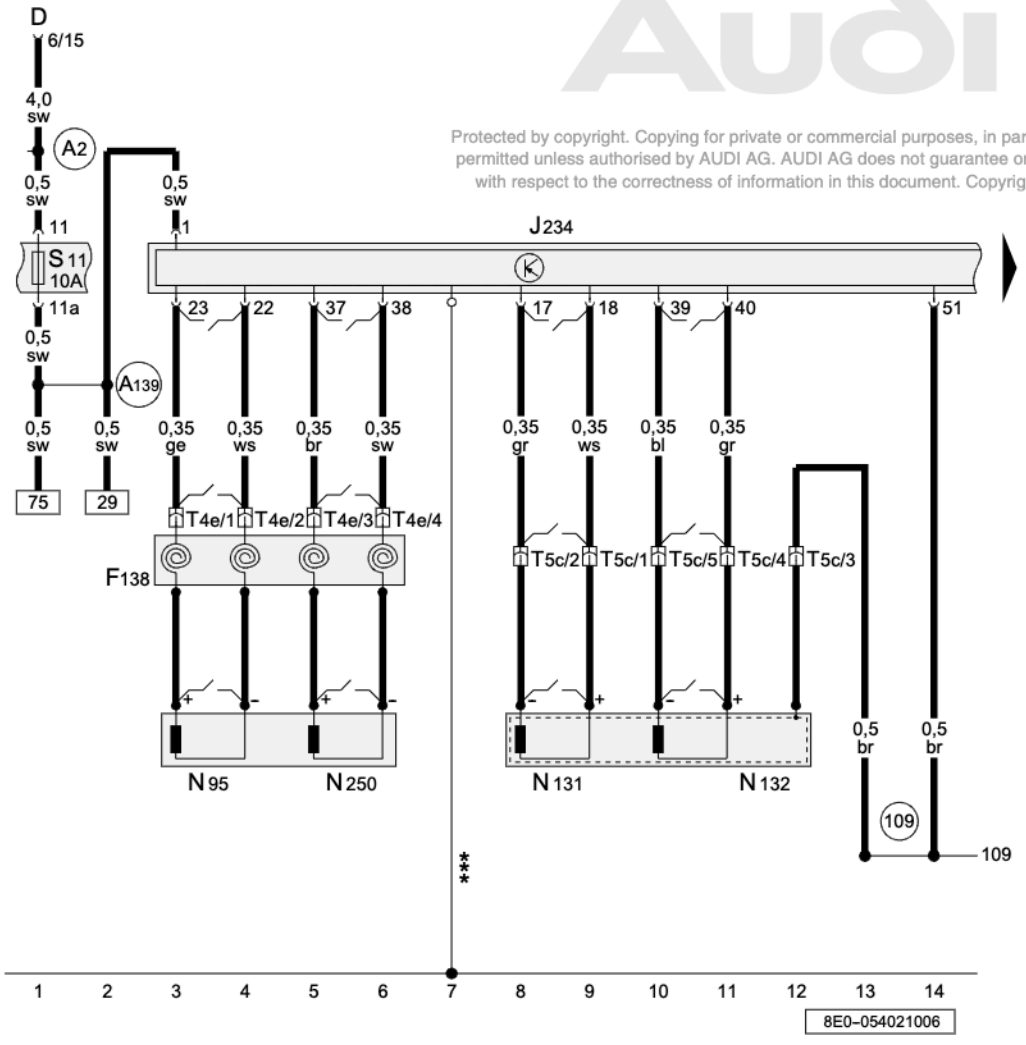

Protected by copyright. Copying for private or commercial purposes, in part or in whole, is not permitted unless authorised by AUDI AG. AUDI AG does not guarantee or accept any liability with respect to the correctness of information in this document. Copyright by AUDI AG.

ws	= white
sw	= black
ro	= red
br	= brown
gn	= green
bl	= blue
gr	= grey
li	= lilac
ge	= yellow
or	= orange
rs	= pink

Driver and Front Passenger Airbags

D	Ignition/Starter Switch
F138	Airbag Spiral Spring/Return Spring With Slip Ring
J234	Airbag Control Module
N95	Driver's Airbag Igniter
N131	Front Passenger's Airbag Igniter 1
N132	Front Passenger's Airbag Igniter 2
N250	Driver's Airbag Igniter 2
S11	Fuse (on fuse/relay panel)
T4e	4-Pin Connector, yellow, on Steering Column Electronic Systems Control Module
T5c	5-Pin Connector, yellow, near glove Compartment
109	Ground connection, in airbag wiring harness
A2	Plus connection (15), in instrument panel wiring harness
A139	Connection 3 (15) (in instrument panel wiring harness)
<fo:external-graphic src="/../PDOC/samba/tools/png-convert/out//slp/ft_icons/kurzbr_l.png" content-width="20pt" scaling="uniform"/>	Short circuit bridge becomes effective when connector is unplugged
***	Ground Connection from Airbag Control Module

Driver and Front Passenger Head Curtain Airbags

J234	Airbag Control Module
N251	Driver's Head Curtain Airbag Igniter
N252	Front Passenger's Head Curtain Airbag Igniter
T2w	2-Pin Connector, lilac, connector station interior, headliner, front left
T2x	2-Pin Connector, lilac, connector station interior, headliner, front right
T4g	4-Pin Connector, yellow, connector station: interior, headliner, front left
T4h	4-Pin Connector, yellow, connector station: interior, headliner, front right
77	Ground Connection (on left lower B-pillar)
78	Ground Connection (on right lower B-pillar)
109	Ground Connection (in airbag wiring harness)
249	Ground connection -2-, in wiring harness interior
277	Ground connector -3-, in wiring harness interior
*	Sedan
**	Avant
<fo:external-graphic src="/../PDOC/samba/tools/png-convert/out//slp/ft_icons/kurzbr_l.png" content-width="20pt" scaling="uniform"/>	Short circuit bridge becomes effective when connector is unplugged

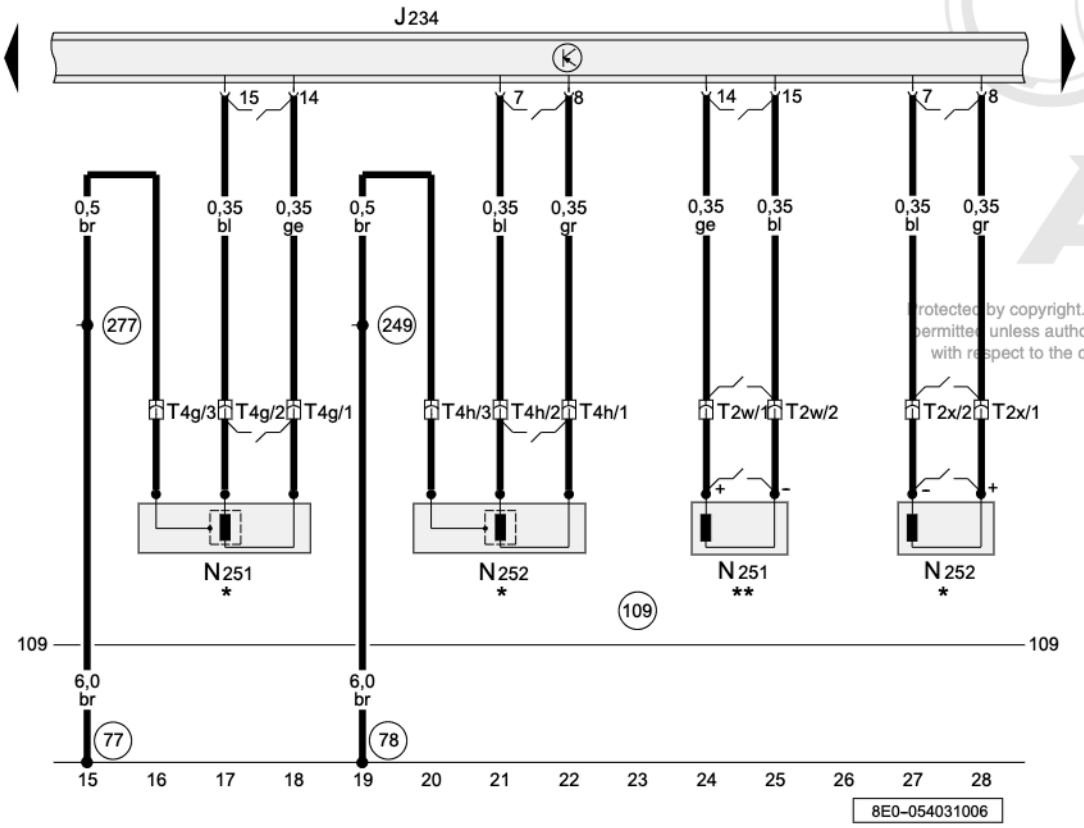

ws	=	white
sw	=	black
ro	=	red
br	=	brown
gn	=	green
bl	=	blue
gr	=	grey
li	=	lilac
ge	=	yellow
or	=	orange
rs	=	pink

Protected by copyright. Copying for private or commercial purposes, in part or in whole, is not permitted unless authorised by AUDI AG. AUDI AG does not guarantee or accept any liability with respect to the correctness of information in this document. Copyright by AUDI AG.

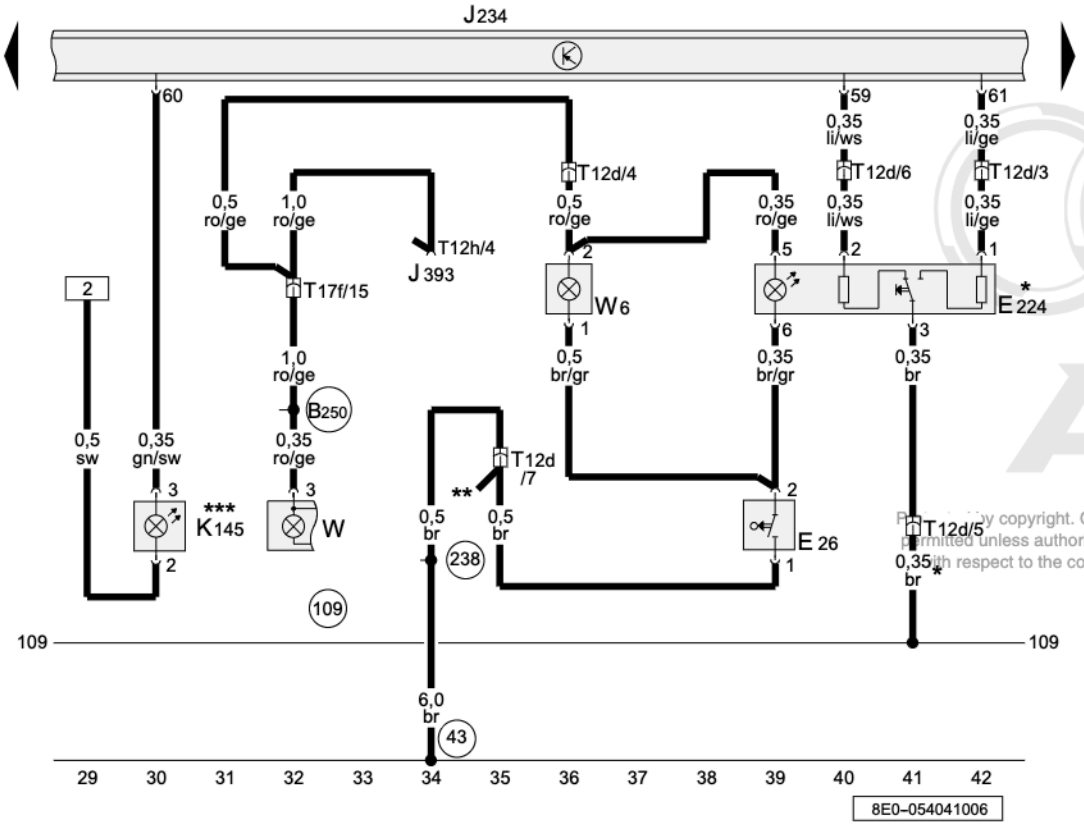

Front Passenger's Airbag -Off- Key Switch

E26	Glove Compartment Lamp Switch
E224	Front Passenger's Airbag -Off- Key Switch
J234	Airbag Control Module
J393	COmfort SYstem Central Control Module
K145	Front Passenger's Airbag Disabled Indicator Lamp
T12d	12-Pin Connector, brown, glove Compartment
T12h	12-Pin Connector, black, on central control module for comfort system
T17f	17-Pin Connector, orange, connector station A-pillar, left
W	Front Interior Lamp
W6	Glove Compartment Lamp
43	Ground Connection (on right lower A-pillar)
109	Ground connection, in airbag wiring harness
238	Ground connection -1-, in wiring harness interior
B250	Plus Connection (in roof wiring harness)
*	not applicable to US/CDN
**	not applicable to US/CDN
***	with Front Passenger's Airbag -Off- Key Switch or US-equipment with Front Passenger's Airbag Disabled Indicator Lamp only

ws	=	white
sw	=	black
ro	=	red
br	=	brown
gn	=	green
bl	=	blue
gr	=	grey
li	=	lilac
ge	=	yellow
or	=	orange
rs	=	pink

Copyright. Copying for private or commercial purposes, in part or in whole, is not permitted unless authorised by AUDI AG. AUDI AG does not guarantee or accept any liability with respect to the correctness of information in this document. Copyright by AUDI AG.

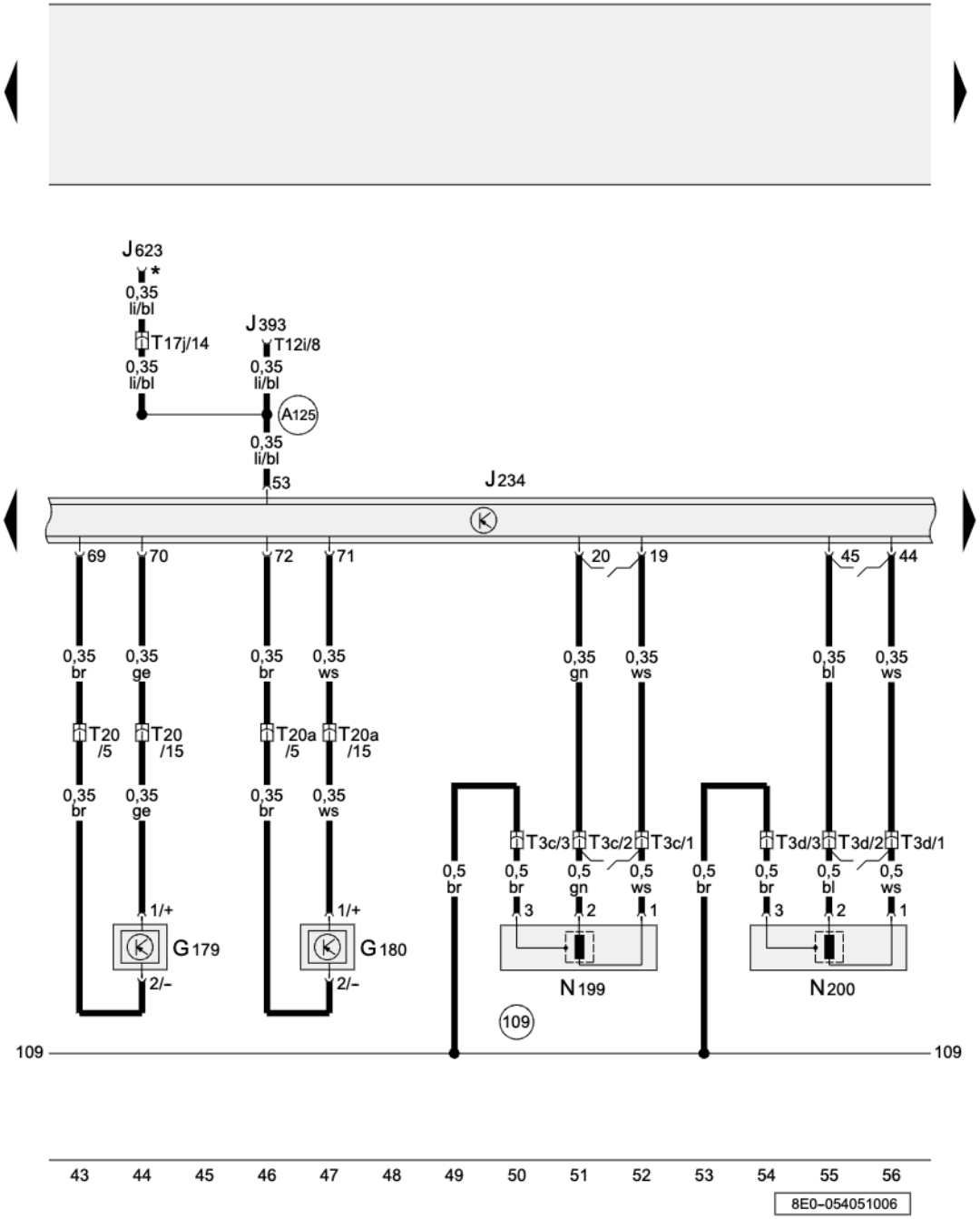

Driver and Front Passenger Side Airbag Crash Sensors, Driver and Front Passenger Side Airbags

G179	Driver's Side Airbag Crash Sensor
G180	Front Passenger's Side Airbag Crash Sensor
J234	Airbag Control Module
J393	Comfor System Central Control Module
J623	Engine Control Module (ECM)
N199	Driver's Side Airbag Igniter
N200	Front Passenger's Side Airbag Igniter
T3c	3-Pin Connector, yellow, passenger compartment: near driver's Seat
T3d	3-Pin Connector, yellow, passenger compartment: near passenger's Seat
T12i	12-Pin Connector, black, on central control module for comfort system (used to be Connector 3)
T17j	17-Pin Connector, brown, connector station E-box, plenum chamber
T20	20-Pin Connector, black, door A-pillar, left
T20a	20-Pin Connector, black, door A-pillar, right
109	Ground connection, in airbag wiring harness
A125	Wire connection (crash signal), in instrument panel wiring harness
<fo:external-graphic src="/../PDOC/samba/tools/png-convert/out//slp/ft_icons/kurzbr_l.png" content-width="20pt" scaling="uniform"/>	Short circuit bridge becomes effective when connector is unplugged

ws = white
sw = black
rot = red
br = brown
gn = green
bl = blue
gr = grey
li = lilac
ge = yellow
or = orange
rs = pink

* ⇒ Current wiring diagram for engine

Protected by copyright. Copying for private or commercial purposes, in part or in whole, is not permitted unless authorised by AUDI AG. AUDI AG does not guarantee or accept any liability with respect to the correctness of information in this document. Copyright by AUDI AG.

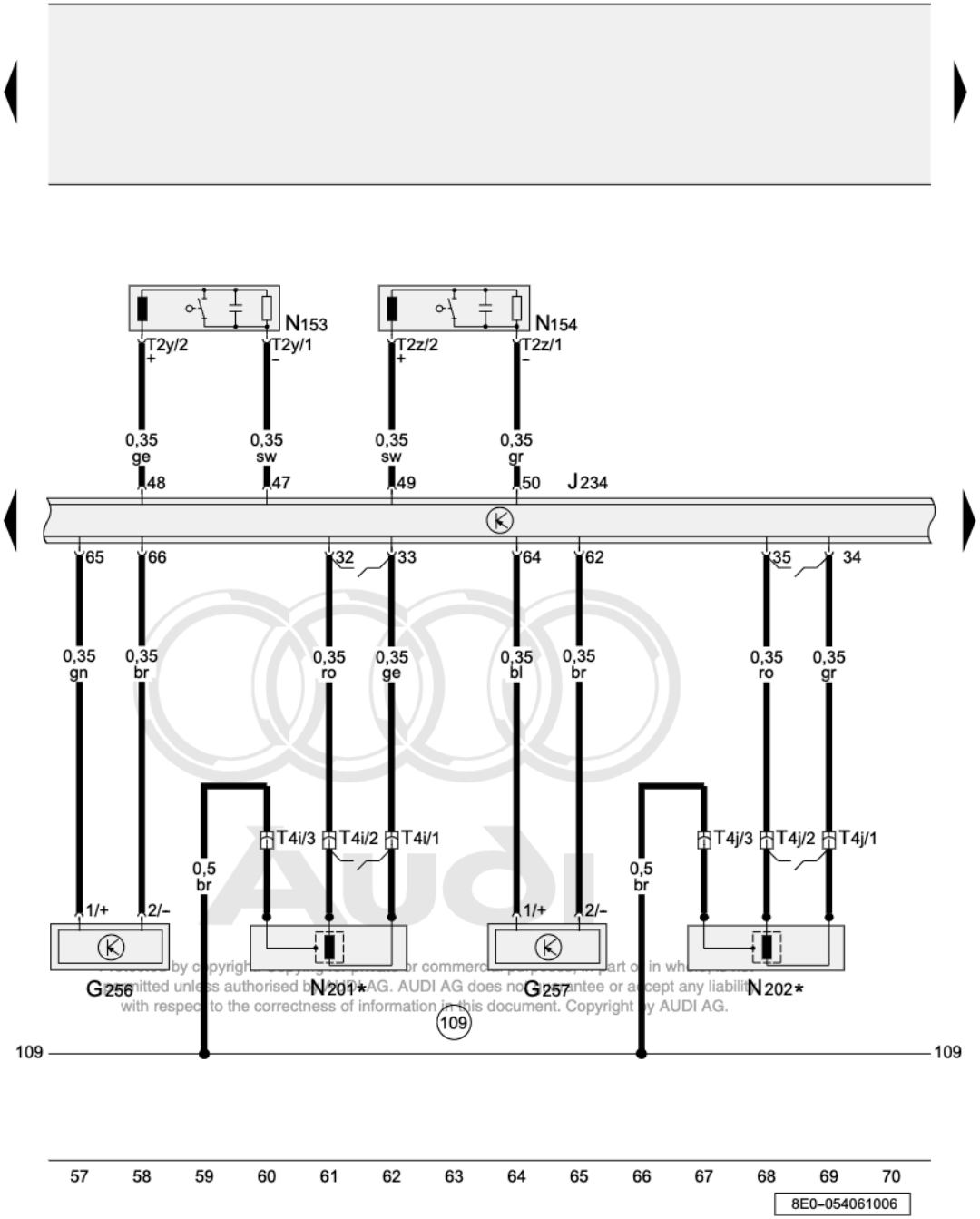

Reproduced by copyright protection or commercial purposes, in part or in whole, not permitted unless authorised by AUDI AG. AUDI AG does not guarantee or accept any liability with respect to the correctness of information in this document. Copyright by AUDI AG.

ws	=	white
sw	=	black
ro	=	red
br	=	brown
gn	=	green
bl	=	blue
gr	=	grey
li	=	lilac
ge	=	yellow
or	=	orange
rs	=	pink

Rear Side Airbag Crash Sensors, Rear Side Airbags, Safety Belt Tensioner Igniters

G256	Rear Side Airbag Crash Sensor (on driver's side)
G257	Rear Side Airbag Crash Sensor (on front passenger's side)
J234	Airbag Control Module
N153	Driver's Safety Belt Tensioner Igniter 1
N154	Front Passenger's Safety Belt Tensioner Igniter 1
N201	Rear Passenger's Side Airbag (driver's side) Igniter
N202	Rear Passenger's Side Airbag (front passenger's side) Igniter
T2y	2-Pin Connector, lilac, passenger compartment on driver's Seat
T2z	2-Pin Connector, lilac, passenger compartment on passenger's Seat
T4i	4-Pin Connector, yellow, connector station passenger compartment, rear left
T4j	4-Pin Connector, yellow, connector station passenger compartment, rear right
109	Ground connection, in airbag wiring harness
<fo:external-graphic src="/../PDOC/samba/tools/png-convert/out//slp/ft_icons/kurzbr_l.png" content-width="20pt" scaling="uniform"/>	Short circuit bridge becomes effective when connector is unplugged
*	with side airbags rear only

Right Safety Belt Switch, Seat Occupied Recognition Control Module, Seat Occupied Recognition Pressure Sensor, Seat Occupied Recognition Safety Belt Force Sensor

E25	Right Safety Belt Switch
G452	Seat Occupied Recognition Pressure Sensor
G453	Seat Occupied Recognition Safety Belt Force Sensor
J234	Airbag Control Module
J706	Seat Occupied Recognition Control Module
T8c	8-Pin Connector, black, passenger compartment: near passenger's Seat
T17k	17-Pin Connector, in passenger's Seat
109	Ground connection, in airbag wiring harness
412	Ground Connection 3 (in seat adjustment wiring harness)
*	with bladder mat only
**	both are possible

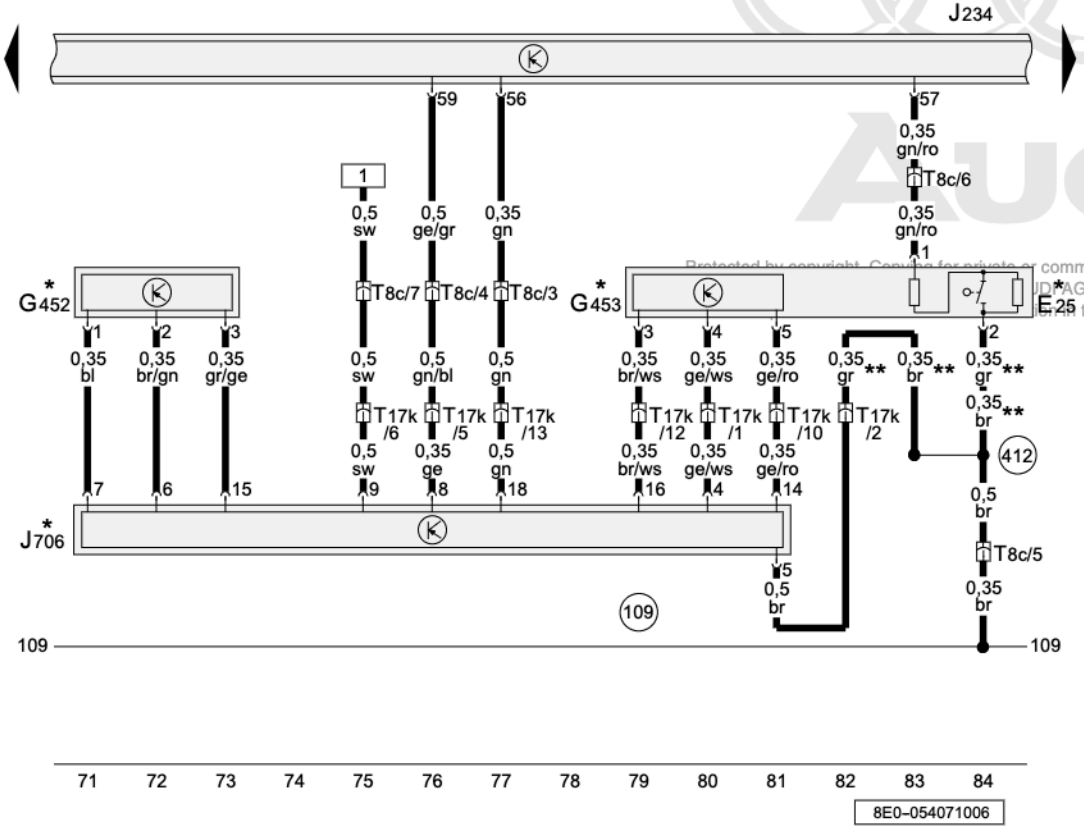

Protected by copyright. Copying for private or commercial purposes, in part or in whole, is not permitted unless AUDI AG does not guarantee or accept any liability with respect to the correctness of this document. Copyright by AUDI AG.

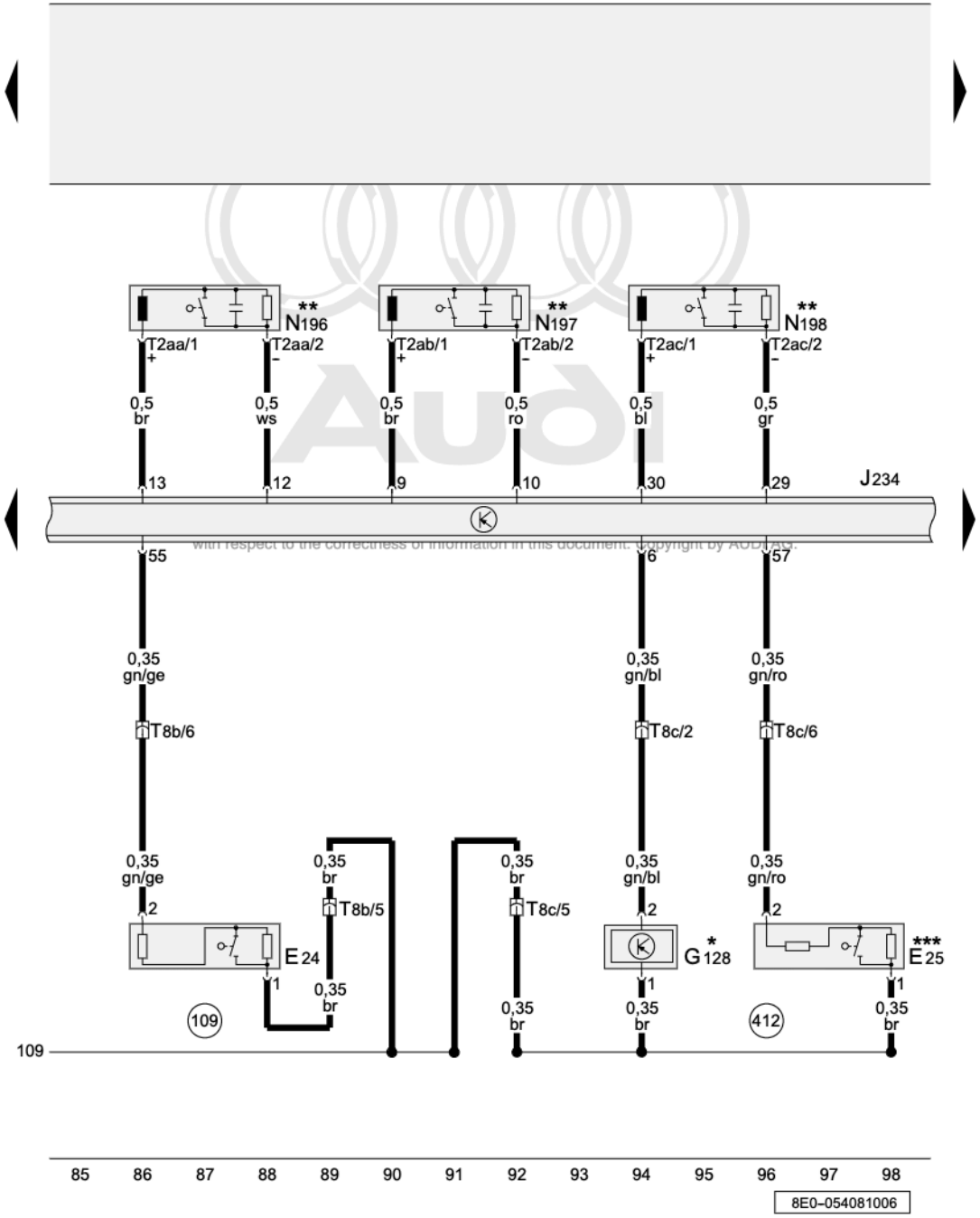

with respect to the correctness of information in this document. Copyright by AUDI AG.

Left Seat Belt Switch, Right Seat Belt Switch, Rear Safety Belt Tensioner Igniters, Front Passenger's Seat Occupied Sensor

E24	Left Seat Belt Switch
E25	Right Seat Belt Switch
G128	Front Passenger's Seat Occupied Sensor
J234	Airbag Control Module
N196	Rear Safety Belt (driver's side) Tensioner Igniter
N197	Rear Safety Belt (front passenger's side) Tensioner Igniter
N198	Center Rear Safety Belt Tensioner Igniter
T2aa	2-Pin Connector, yellow, passenger compartment rear left
T2ab	2-Pin Connector, yellow, passenger compartment rear right
T2ac	2-Pin Connector, yellow, passenger compartment rear center
T8b	8-Pin Connector, black, passenger compartment: near driver's Seat
T8c	8-Pin Connector, black, passenger compartment: near passenger's Seat
109	Ground connection, in airbag wiring harness
412	Ground Connection 3 (in seat adjustment wiring harness)
*	with Front Passenger's Seat Occupied Sensor only
**	with rear belt tensioner igniter only
***	without bladder mat only

ws	=	white
sw	=	black
ro	=	red
br	=	brown
gn	=	green
bl	=	blue
gr	=	grey
li	=	lilac
ge	=	yellow
or	=	orange
rs	=	pink

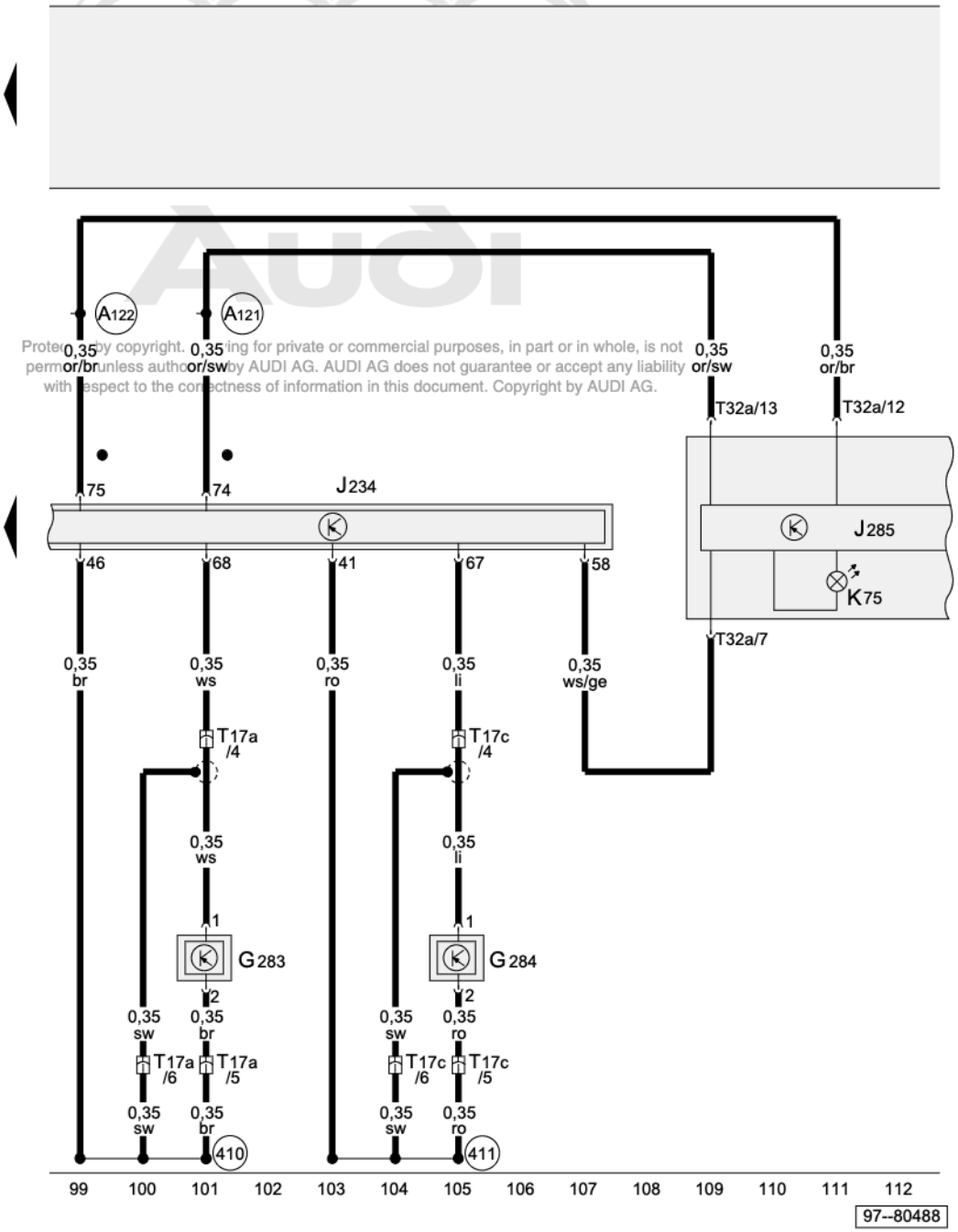

Protected by copyright. Copying for private or commercial purposes, in part or in whole, is not permitted unless authorized by AUDI AG. AUDI AG does not guarantee or accept any liability with respect to the correctness of information in this document. Copyright by AUDI AG.

Driver and Front Passenger Front Airbag Crash Sensors, Instrument Cluster Control Module

G283	Driver's Front Airbag Crash Sensor
G284	Front Passenger's Front Airbag Crash Sensor
J234	Airbag Control Module
J285	Instrument Cluster Control Module
K75	Airbag Malfunction Indicator Lamp (MIL)
T17a	17-Pin Connector, red, connector station A-pillar, left
T17c	17-Pin Connector, red, connector station A-pillar, right
T32a	32-Pin Connector, green, on instrument panel insert
410	Sensor Ground Connection 1 (in main wiring harness)
411	Sensor Ground Connection 2 (in main wiring harness)
A121	Wire connection (High-bus), in instrument panel wiring harness
A122	Wire connection (Low-bus), in instrument panel wiring harness
I	CAN-Bus (Data bus)

ws	=	white
sw	=	black
ro	=	red
br	=	brown
gn	=	green
bl	=	blue
gr	=	grey
li	=	lilac
ge	=	yellow
or	=	orange
rs	=	pink